INSTALLATION INSTRUCTIONS

2014-18 GM K1500 DENALI 4WD 3” BUDGET SYSTEM W/ UNIBALL UPPER CONTROL ARM- MAGNARIDE

FTS21195

Fabtech Motorsports | 4331 Eucalyptus Ave. Chino, CA 91710

Tech Line: 909-597-7800 | **Fax:** 909-597-7185 | **Web:** www.fabtechmotorsports.com

TRUCK - PARTS LIST

	FTS21195	3” K2 BUDGET UNIBALL UCA SYS- MAGNARIDE
2	FT20673BK	REAR SHOCK BRACKET
2	FT20560BK	COIL SPACER
1	FT20625	DIFF MOUNT - DRIVER
1	FT20626	DIFF MOUNT - PASSENGER
1	FT20585BK	UPPER CONTROL ARM - DRIVER
1	FT20586BK	UPPER CONTROL ARM - PASSENGER
1	FT20627BK	SKID PLATE
2	FTBK15	BLOCK 1.5 IN
4	FT1500U	UBOLT SQ 9/16-18X10.00X2.63
1	FT20694	HARDWARE KIT
1	FT20695	HARDWARE SUBASSEMBLY
1	FT90118	BUSHING KIT

	FT20695	HARDWARE SUBASSEMBLY
1	FT21195i	INSTRUCTIONS
1	FTREGCARD	REGISTRATION CARD
1	FTAS16	DRIVER WARNING DECAL
1	FTAS12	STICKER FT BLUE 10X4 DIE CUT
2	FT94503	UNIBALL ADAPTER PIN -P-17-4
4	FT147	HD MISALIGNMENT

	FT90118	BUSHING KIT
4	FTS1001	A-ARM BUSHING
4	FT1002	BUSHING UCA HALF
4	FT1500-6-101	SLEEVE .750 X .560 X 2.180
1	FTLUBE	URETHANE LUBE PACKET

	FT20694	HARDWARE KIT
Qty.	Description	Location
	Sub Bag 1	
20	7/16 SAE WASHER G5 ZINC	
6	7/16 NYLOCK NUT ZINC	
4	7/16-14 C-LOCK NUT ZINC	
4	7/16-14 X 2-1/4 HEX BOLT G8 ZINC	
2	1/4 SAE WASHER G5 ZINC	
2	1/4-20 NYLOCK NUT ZINC	
2	1/4-20 X 1 HEX BOLT G5 ZINC	
16	5/16 SAE WASHER G5 ZINC	
8	5/16-18 STOVER NUT G5 ZINC	
8	5/16-18 X 1 HEX BOLT G8 ZINC	
2	1/2 SAE WASHER G5 ZINC	
2	1/2-20 C-LOCK NUT ZINC	
2	3/4-16 C-LOCK NUT ZINC	
4	NEOPRENE CLAMP	
4	1/4-28 SELF TAP SCREW	
3	#12 X 3/4” TEK SCREW	
	Sub Bag 2	
4	1/2 SAE WASHER G8 ZINC	
2	1/2-13 C-LOCK NUT ZINC	
3	1/2-13 X 4 HEX BOLT G8 ZINC	
3	M12-1.75 X 70MM HEX	
8	3/8-16 X 3/4 HEX SELF TAP ZINC	
2	M10-1.5 X 30MM HEX BOLT	
	Sub Bag 3	
8	9/16 SAE WASHER G5 ZINC	
8	9/16-18 NYLOCK NUT G5 ZINC	
2	1/2-13 X 3-1/2 HEX BOLT G8 ZINC	
4	1/2 SAE WASHER G8 ZINC	
2	1/2-13 C-LOCK NUT ZINC	
6	ZIP TIE 8” BLACK	
1	THREAD LOCKING COMPOUND	

- PRE-INSTALLATION NOTES -

Read this before you begin installation-

Check all parts to the parts list above before beginning installation. If any parts are missing contact Fabtech at 909-597-7800 and a replacement part will be sent to you immediately.

Read all instructions thoroughly from start to finish before beginning the installation. If these instructions are not properly followed severe frame, driveline and / or suspension damage may occur.

Check your local city and state laws prior to the installation of this system for legality. Do not install if not legal in your area.

Prior to the installation of this suspension system perform a front end alignment and record. Do not install this system if the vehicle alignment is not within factory specifications. Check for frame and suspension damage prior to installation.

The installation of this suspension system should be performed by two professional mechanics.

Installation of all fasteners requires the use of provided thread locking compound with proper torque values as indicated throughout the installation. Apply thread locking compound upon the final torque of the fastener.

Do not combine this suspension system with any other lift device or parts.

WARNING- Installation of this system will alter the center of gravity of the vehicle and may increase roll over as compared to stock.

For technical assistance call: 909-597-7800 or e-mail: info@fabtechmotorsports.com

OEM Wheels and tires cannot be used after the installation of this kit. Larger tire cannot be installed on the OEM wheels.

Vehicles that receive oversized tires should check ball joints, tie rods ends, pitman arm and idler arm every 2500-5000 miles for wear and replace as needed.

Verify differential fluid is at manufactures recommended level prior to kit installation. Installation of the kit will reposition the differential and the fill plug hole may be in a different position. (For example, if the manufacture recommends 3 quarts of fluid, make sure the diff has 3 quarts of fluid). Check your specific manual for correct amount of fluid.

Recommend Tires and Wheels:

Use 33/12.50R17 tire w/ 17x8 wheels w/ 4-1/2” BS w/ minor trimming
Use 275/65R18 tire w/ 18x8 wheels w/ 4-1/2” BS w/ minor trimming
Use 295/55R20 tire w/ 20x9 wheels w/ 5” BS w/ minor trimming

- INSTRUCTIONS -

FRONT SUSPENSION

1. Disconnect the negative terminal on the battery. Jack up the front end of the truck and support the frame rails with jack stands. **NEVER WORK UNDER AN UNSUPPORTED VEHICLE!** Remove the front tires.

2. Starting on the driver side of the truck, remove the bolt attaching the brake line tab to the spindle.

3. Follow the wheel speed sensor wire from frame rail plug. Separate the wire from the upper control arm. Disconnect the adjusting rod from the upper control arm bracket. **SEE FIGURE 1**

FIGURE 1 - STEP 3

4. Remove the nuts securing the tie rod and upper arm ball joints to the spindle. Separate both joints from the spindle and remove the upper control arm and tie rod from the spindle. **SEE FIGURE 2**

FIGURE 2 - STEP 4

5. Remove the factory coil over and save. **SEE FIGURE 3**

FIGURE 3 - STEP 5

6. Remove the upper control arm form the vehicle and save the factory hardware. Remove auto ride bracket and save for reinstallation. **SEE FIGURE 4**

FIGURE 4 - STEP 6

7. Remove the factory CV shaft from the differential drive flange on both sides of vehicle. **SEE FIGURE 5**

FIGURE 5 - STEP 7

8. Using a die grinder remove the factory droop stop off the control arm pocket. **SEE FIGURES 6-7**

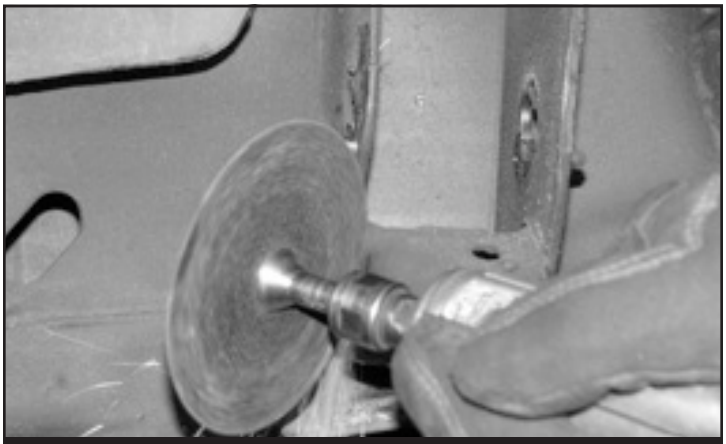

FIGURE 6 - STEP 8

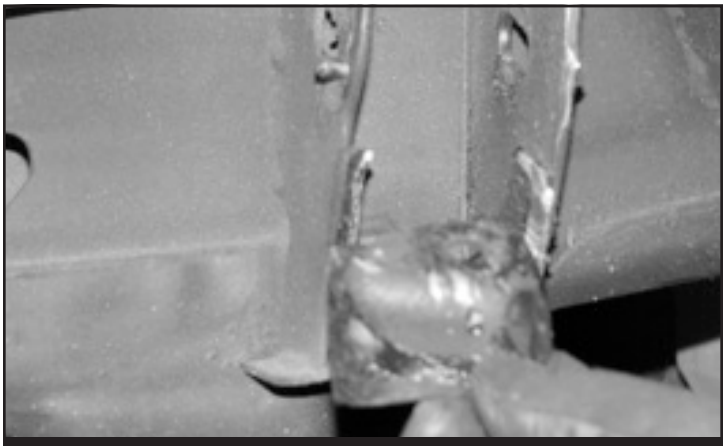

FIGURE 7 - STEP 8

9. Using a die grinder, partially cut the brake line bracket. This will allow the bracket to be bent and removed from the brake line. Be careful not to damage brake hose.

10. Remove the factory rear cross member and retain factory hardware. **SEE FIGURE 8**

FIGURE 8 - STEP 9

11. Due to vehicle variances, the steering will need to be removed and trimmed on the driver side where the wiring harnesses are located. **SEE FIGURE 9**

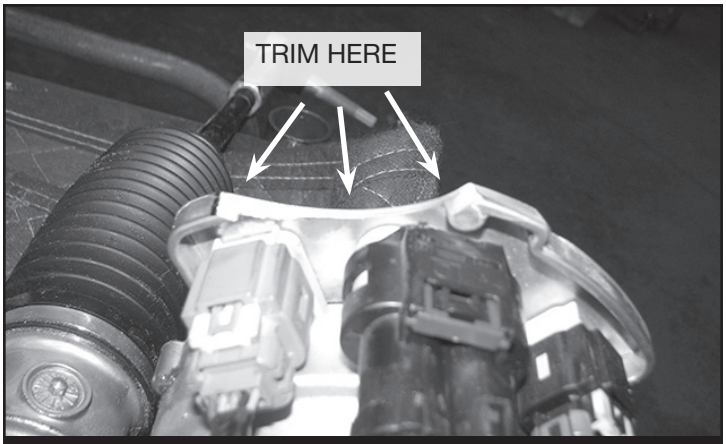

FIGURE 9 - STEP 11

12. Disconnect the drive shaft from the front differential solenoid wiring. Disconnect the differential vent tube and remove the diff. **SEE FIGURE 10**

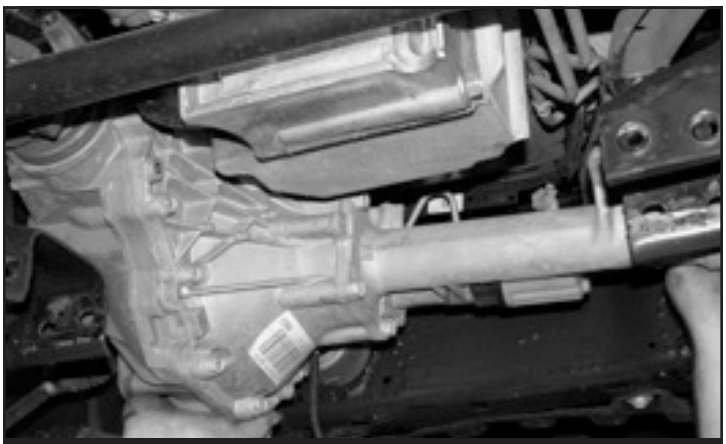

FIGURE 10 - STEP 12

13. Locate the factory passenger side diff mount and remove. **SEE FIGURE 11**

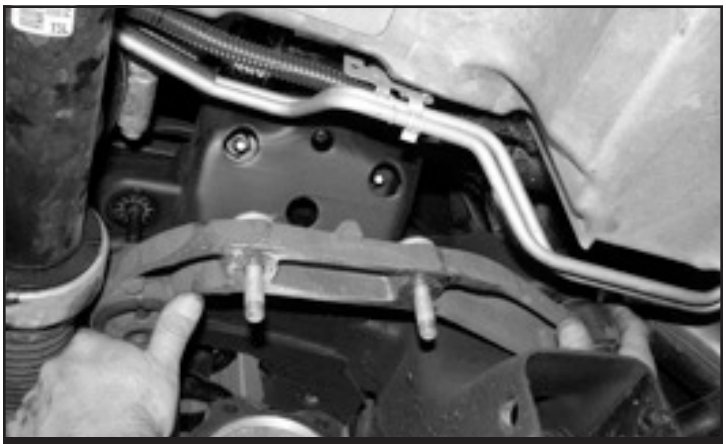

FIGURE 11 - STEP 13

14. Remove the factory studs from the differential mount and reinstall the differential mount. **SEE FIGURE 12**

FIGURE 12 - STEP 14

15. Locate the factory diff and cut off the driver side rear cooling fins. **SEE FIGURES 13-14**

FIGURE 13 - STEP 15

FIGURE 14 - STEP 15

16. Locate the factory rear driver lower control arm pocket / cross member mount. Using a die grinder remove the material shown in the diagram below. **SEE FIGURES 15-16**

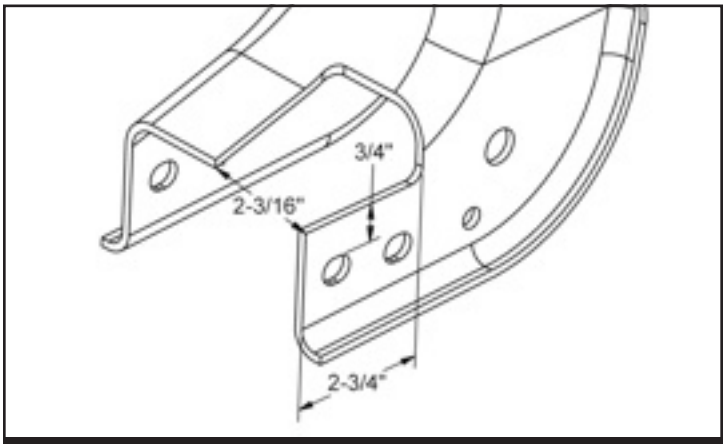

FIGURE 15 - STEP 16

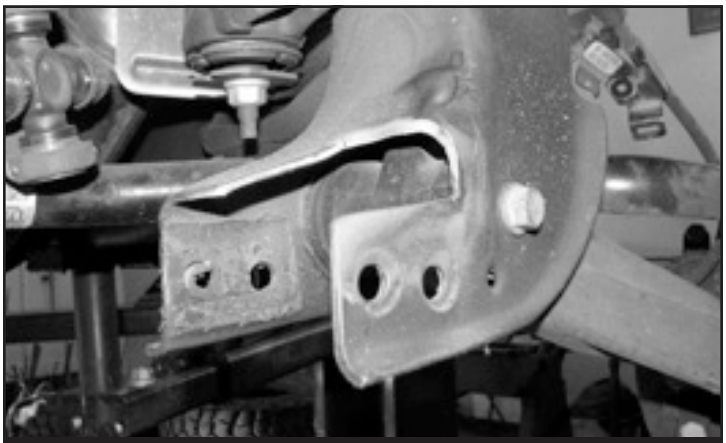

FIGURE 16 - STEP 16

17. Locate the factory driver side Diff mount. Using a die grinder remove the locating pin from the mount. **SEE FIGURES 17-18**

FIGURE 17 - STEP 17

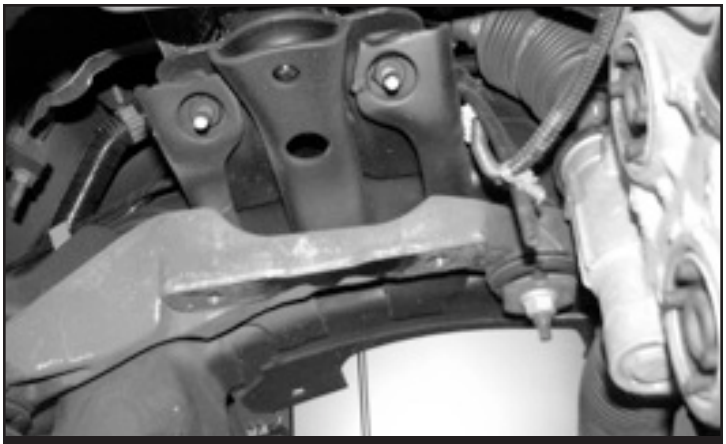

FIGURE 18 - STEP 17

18. Locate the FT20625 driver side diff mount and the FT20626 passenger side diff mount. Staring on the driver side, remount the diff with two M12-1.75 x 70mm bolts. **SEE FIGURE 19**

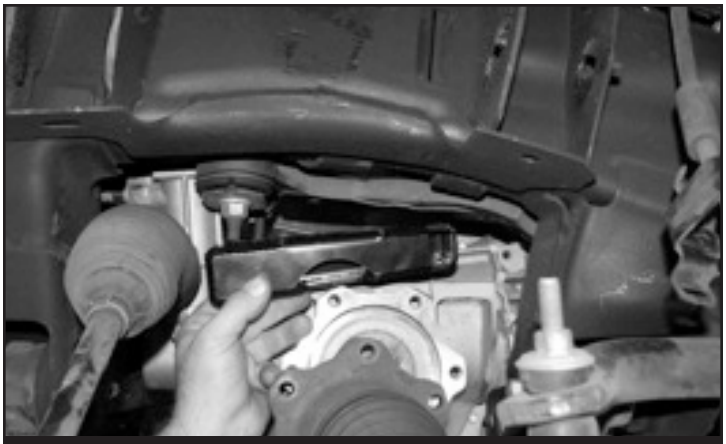

FIGURE 19 - STEP 18

19. Using the passenger side differential mount, two ½”-13 x 4” bolts, nuts and washers, mount the passenger side of the differential. **NOTE: Run the bolts from the bottom up.** Torque the 1/2” bolts to 127 ft-lbs and the 12mm bolts to 100 ft-lbs. **SEE FIGURE 20-21**

FIGURE 20 - STEP 19

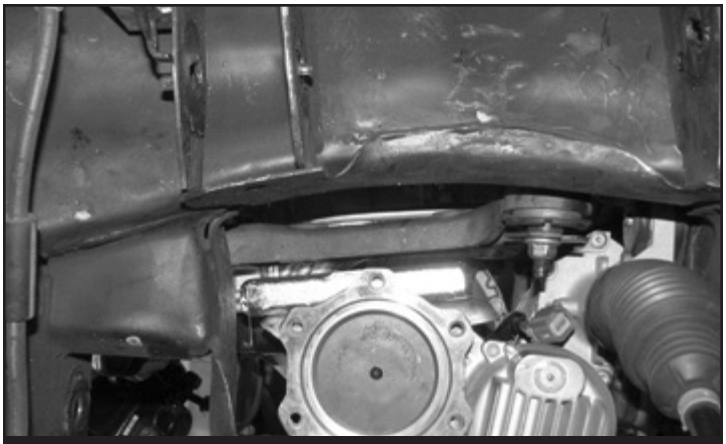

FIGURE 21 - STEP 19

20. Locate the factory rear cross member. Using a die grinder remove the material from the driver side shown in the diagram. **SEE FIGURES 22-23**

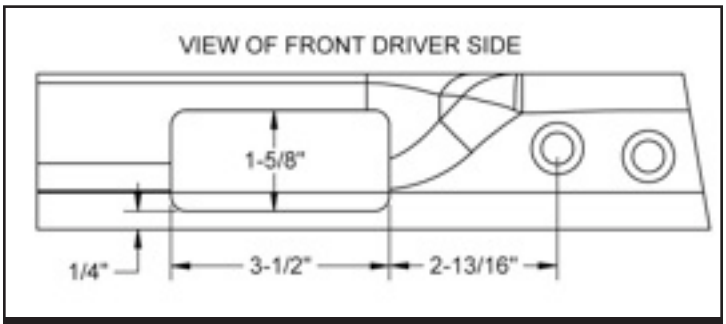

FIGURE 22 - STEP 20

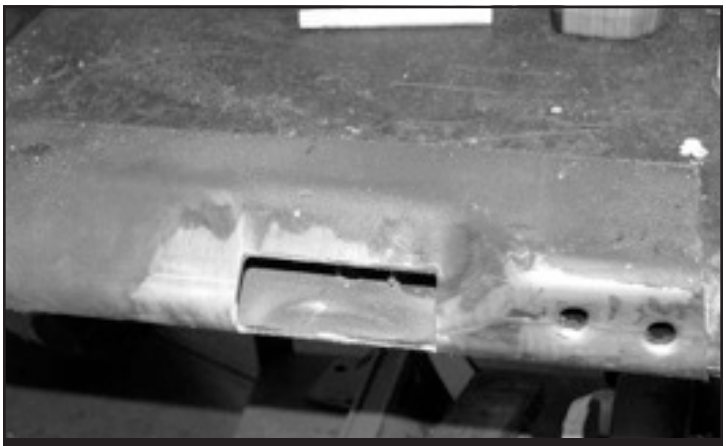

FIGURE 23 - STEP 20

21. Reinstall Factory rear crossmember. Torque bolts to 100 ft-lbs.

22. Reconnect the drive shaft, differential vent tube and solenoid with factory hardware. Torque to 17 ft-lbs.

23. Trim the front of the differential to clear the new skid plate. **SEE FIGURES 24-25**

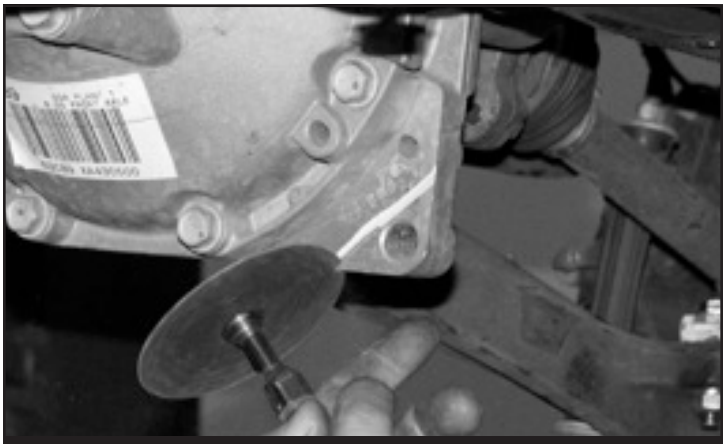

FIGURE 24 - STEP 23

FIGURE 25 - STEP 23

24. Locate the FT20627BK skid plate and the two 3/8”-16 x 3/4” self taping bolts. Mount the skid plate to the factory front cross member using two of the factory front bolts. With front of the skid plate mounted, use the back two holes in the skid plate for a drill guide. Drill two 5/16” pilot holes and install the two 3/8” self taping bolts. Torque to 21 ft-lbs. Be careful not to over torque. **SEE FIGURE 26**

FIGURE 26 - STEP 24

25. Locate the FT20558BK driver upper control arm and one FT20619 ball joint, two FTS1001bushings, two FT1002 bushings, two grease zerks FT84, and two FT1500-6-101 sleeves.

26. Install one FTS1001 bushing, one FT1002 bushing and a FT1500-6-101 sleeve zerk in each barrel. Use the FTLUBE urethane lube on each bushing.

27. Measure 3” like shown in **FIGURE 27** and drill a hole using a 11/64” bit. Install the factory auto ride bracket to the new control arm using the supplied #12 Tek Screw. **SEE FIGURE 28**

FIGURE 27 - STEP 30

FIGURE 28 - STEP 27

28. Repeat steps 23-25 using FT20559BK for passenger side.

29. Using a 1/2” drill, chase out the end of the upper ball joint tapper on the spindle. **SEE FIGURE 29**

FIGURE 29 - STEP 29

30. Install the upper control arm in to the frame using factory hardware and leave loose at this time. **SEE FIGURE 30**

FIGURE 30 - STEP 30

31. If installing Dirt Logic coilover, P/N FTS810151, do so at this time using hardware provided with that shock. Otherwise, continue with Step 31 with the factory shock.

32. Locate the factory coil over and remove the sheet metal nut from the lower bar pin. **SEE FIGURE 31**

FIGURE 31 - STEP 32

33. Trim a 1/4” off the studs on the top side of the coil over. **SEE FIGURE 32-33**

FIGURE 32 - STEP 33

FIGURE 33 - STEP 33

34. Install the FT20560BK coil spacer using the factory nuts and torque to 30 ft-lbs. **SEE FIGURE 34**

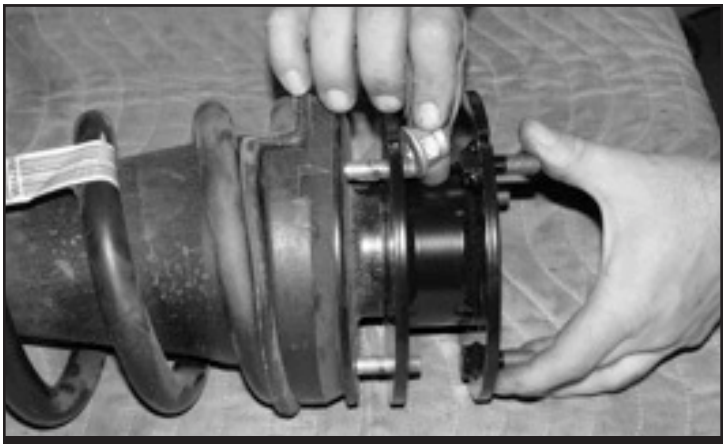

FIGURE 34 - STEP 34

35. Locate the three 7/16” nylock nuts and install the coil over into the upper shock mount. Leave loose at this time. **SEE FIGURE 35**

FIGURE 35 - STEP 35

36. Locate the two 7/16”-14 x 2-1/4” bolts, nuts and washers and install the lower bar pin mount onto the lower control arm. Torque the upper and lower bolts to 59 ft-lbs. **SEE FIGURE 36**

FIGURE 36 - STEP 36

37. Locate FT94502 (Uniball adapter pin) and two FT147 (Uniball misalignment spacers).

SEE FIGURE 37 FOR STEPS 38-42

38. Insert the uniball pin into the factory knuckle upper ball joint taper. Install the 1/2-20 lock nut with thread lock compound and flat washer onto the bottom side of the pin. This will lock the pin into the knuckle. Torque to 150 ft-lbs.

39. Install one FT147 uniball misalignment spacer on to the pin.

40. Swing the control arm down, slide the pin into the uniball on the control arm seating the lower FT147 spacer in the control arm.

41. Install the upper FT147 (uniball misalignment spacer) onto the pin.

42. Install the 3/4”-16 lock nut on the top side of the pin with thread lock compound and torque to 150 ft-lbs.

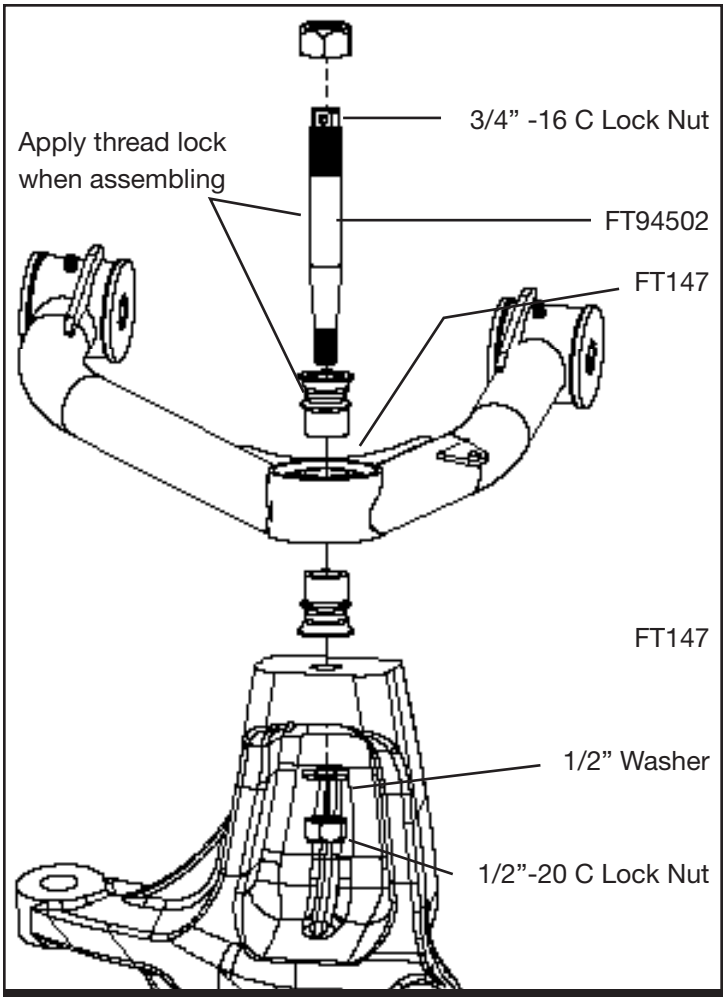

FIGURE 37 - STEP 37

43. Reinstall the CV shaft and torque to 58 ft-lbs.

44. Install the FT clamp on top of the spindle to hold the wheel speed sensor wire. **SEE FIGURE 38**

FIGURE 38 - STEP 44

45. Use an FTCLAMP, 1/4”-20 x 1” bolt, nut, and washer to connect the brake line to the control arm. **SEE FIGURE 39**

FIGURE 39 - STEP 45

46. Reconnect the wheel speed sensor and zip tie to the brake line. Reconnect the auto ride adjusting rod to the control arm. **SEE FIGURE 40**

FIGURE 40 - STEP 46

47. Repeat steps 3-41 on passenger side of vehicle where applicable.

REAR SUSPENSION

(FOR SUV REAR SUSPENSION SKIP TO STEP 52)

NOTE: Be sure not to over extend any electrical harnesses attached to the rear axle.

48. Locate the FTBK15 blocks and the four FT1500U u-bolts. Disconnect the rear shock at the lower mount. With the factory block and u-bolts removed and the rear axle clear of the leaf spring, make sure the block will fully seat onto the leaf spring and the spring pad of the rear axle housing with the wide end of the block to the rear of the vehicle. On the leaf spring make sure the center pin head will seat fully into the hole of the block allowing the top surface of the block to rest against the leaf spring. Install the new u-bolts with washers and nuts from the FT916H hardware kit and torque to 150 ft-lbs. **Note – The Vehicle’s stance will be level with the Fabtech block. To maintain the factory stance (rear high) retain the factory block when installing the Fabtech block. NOTE: For FTS21155 install FTBK3 (3” Block).**

49. Install FT20673BK rear shock bracket like shown in **FIGURE 41.** Torque to 100 ft-lbs

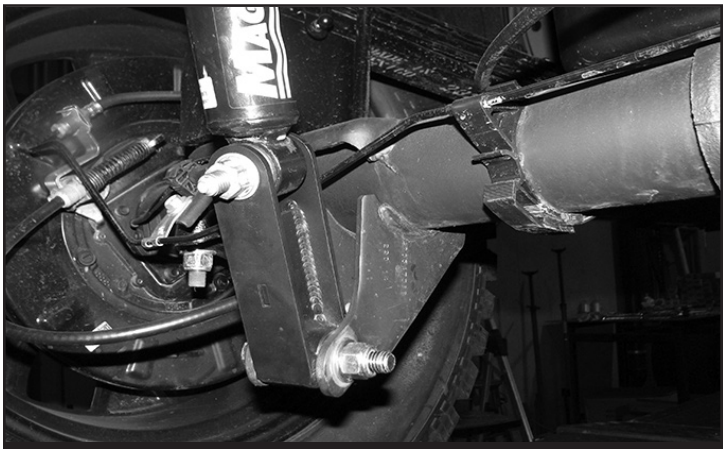

FIGURE 41 - STEP 49

50. Install tires and wheels and torque lug nuts to wheel manufacturer’s specifications. Turn front tires left to right and check for appropriate tire clearance. **Note - Some oversized tires may require trimming of the front bumper & valance.**

51. Check front end alignment and set to factory specifications. Readjust headlights.

52. Recheck all bolts for proper torque.

53. Recheck brake hoses, ABS wires and suspension parts for proper tire clearance while turning tires fully left to right.

54. Install Driver Warning Decal. Complete product registration card and mail to Fabtech in order to receive future safety and technical bulletins on this suspension.

SUV REAR SUSPENSION

55. Using a floor jack, raise the differential just enough to slightly compress the rear shocks. Remove the bolts securing the bottom of the shocks to the axle. Remove the upper pivot bolt that attaches the track bar to the frame bracket.

56. Lower the floor jack to release the coil springs. Remove the coil springs from the vehicle and save with the rubber upper coil insulator.

57. Locate FT20573 Coil Spacers and place onto the coil perch on the axle. With the floor jack under the rear axle, attach your coil spring compressor onto the new rear coil spring and compress the coil 1”-2”. Set the upper coil insulator on top of the coil spring and position the top of the coil into the frame pocket. Push the bottom of the coil spring onto the new spacer and raise the floor jack under the axle to hold the coil spring in position. Remove the coil spring compressors. Repeat this with the opposite coil spring. USE CAUTION WHEN WORKING WITH COIL SPRING COMPRESSORS, THEY CAN BE UNDER EXTREME LOAD. **SEE FIGURES 42-44**

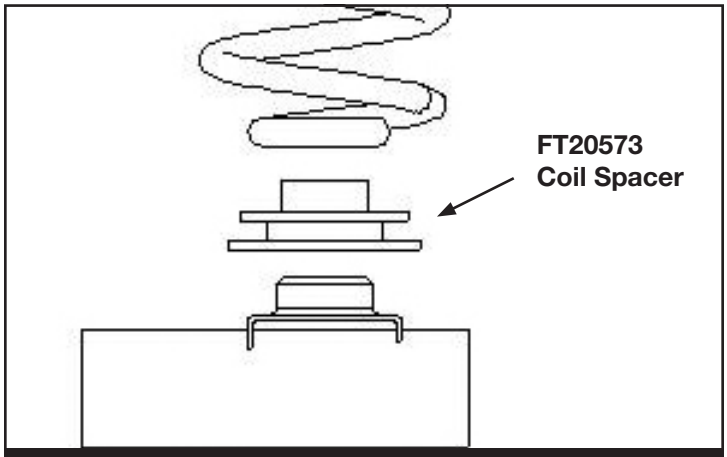

FIGURE 42 - STEP 57

FIGURE 43 - STEP 57

FIGURE 44 - STEP 57

58. Reinstall the shocks onto the lower axle mounts using FT20673BK Rear Shock Bracket Torque to 100 ft-lbs. **SEE FIGURE 45**

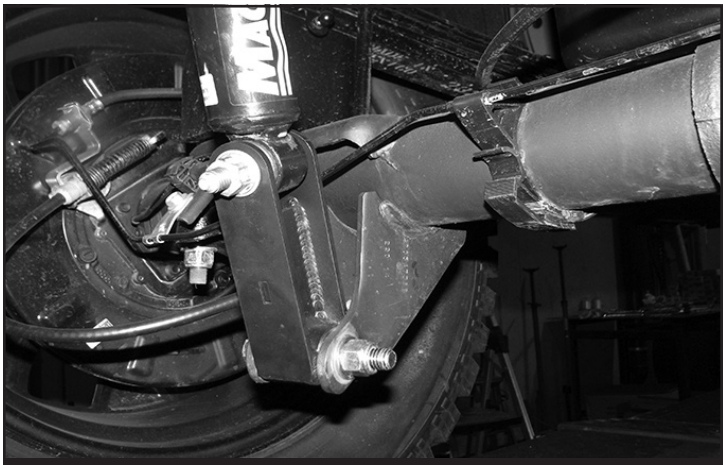

FIGURE 45 - STEP 58

59. Raise the floor jack supporting the rear axle and slide the upper mount of the track bar into the track bar bracket. Align the track bar with the hole and reinstall the factory bolt. Torque to 95 lbs.

60. Install tires and wheels and torque lug nuts to wheel manufacturer’s specifications. Turn front tires left to right and check for appropriate tire clearance. **Note - Some oversized tires may require trimming of the front bumper & valance.**

61. Check front end alignment and set to factory specifications. Readjust headlights.

62. Recheck all bolts for proper torque.

63. Recheck brake hoses, ABS wires and suspension parts for proper tire clearance while turning tires fully left to right.

64. Install Driver Warning Decal. Complete product registration card and mail to Fabtech in order to receive future safety and technical bulletins on this suspension.

Vehicles that will receive oversized tires should check ball joints and all steering components every 2500-5000 miles for wear and replace as required.

RE-TORQUE ALL NUTS, BOLTS AND LUGS AFTER 50 MILES AND PERIODICALLY THEREAFTER.

For technical assistance call: 909-597-7800

- Product Warranty and Warnings -

Fabtech provides a Limited Lifetime Warranty to the original retail purchaser who owns the vehicle, on which the product was originally installed, for defects in workmanship and materials.

The Limited Lifetime Warranty excludes the following Fabtech items; bushings, bump stops, ball joints, tie rod ends, limiting straps, cross shafts, heim joints and driveshafts. These parts are subject to wear and are not considered defective when worn. They are warranted for 60 days from the date of purchase for defects in workmanship.

Dirt Logic and Performance Coilover take apart shocks are considered a serviceable shock with a one year warranty on leakage only. Service seal kits are available separately for future maintenance. All other shocks are covered under our Limited Lifetime Warranty.

Fabtech does not warrant any product for finish, alterations, modifications and/or installation contrary to Fabtech's instructions. Alterations to the finish of the parts including but not limited to painting, powder coating, plating and/or welding will void all warranties. Some finish damage may occur to parts during shipping, which is considered normal and is not covered under warranty.

Fabtech products are not designed nor intended to be installed on vehicles used in race applications or for racing purposes or for similar activities. (A "RACE" is defined as any contest between two or more vehicles, or any contest of one or more vehicle against the clock, whether or not such contest is for a prize). This warranty does not include coverage for police or taxi vehicles, race vehicles, or vehicles used for government or commercial purposes. Also excluded from this warranty are sales outside of the United States of America.

Installation of most suspension products will raise the center of gravity of the vehicle and will cause the vehicle to handle differently than stock. It may increase the vehicle's susceptibility to a rollover, on road and off road, at all speeds. Extreme care should be taken to operate the vehicle safely at all times to prevent rollover or loss of control resulting in serious injury or death. Fabtech front end Desert Guards may impair the deployment or operation of vehicles equipped with supplemental restraining systems/air bag systems and should not be installed if the vehicle is equipped as so.

Fabtech makes every effort to ensure suspension product compatibility with all vehicles listed on the website, but due to unknown auto manufacturer's production changes and/or inconstancies by the auto manufacturer, Fabtech cannot be responsible for 100% compatibility, including the fitment of tire and wheel sizes listed. The Tire and Wheel sizes listed in Fabtech's website are only a guideline for street driving with noted fender trimming. Fabtech is not responsible for damages to the vehicle's body or tires. Fabtech is not responsible for premature wear of factory components due to the installation of oversized tires and wheels.

Fabtech's obligation under this warranty is limited to the repair or replacement, at Fabtech option, of the defective product only. All costs of removal, installation or re-installation, freight charges, incidental or consequential damages are expressly excluded from this warranty. Fabtech is not responsible for damages and/or warranty of other vehicle parts related or non related to the installed Fabtech product. This warranty is expressly in lieu of all other warranties expressed or implied. This warranty shall not apply to any product that has been subject to accident, negligence, alteration, abuse or misuse as determined by Fabtech.

Fabtech suspension components must be installed as a complete system including shocks as shown on our website. All warranties will become void if Fabtech parts are combined and/or substituted with other aftermarket suspension products. Combination and/or substitution of other aftermarket suspension parts may cause premature wear and/or product failure resulting in an accident causing injury or death. Fabtech does not warrant products not manufactured by Fabtech.

Depending on the condition of the factory suspension components retained after the installation of a Fabtech suspension not all vehicles may have the same ride stance front to rear as described in the website. The blue color of suspension components shown in all Fabtech photographs are for display purposes only. Majority of all Fabtech components will be black specifically where noted with part numbers ending in BK.

Installation of Fabtech product may void the vehicles factory warranty; it is the consumer's responsibility to check with their local vehicle's dealer for warranty disposition before the installation of the product. Some state laws may prohibit modification of suspension to a vehicle in whole or in part. It is the responsibility of the installer and consumer to consult local laws prior to the installation of any Fabtech suspension product to comply with such written laws.

It is the responsibility of the distributor and/or the retailer to review all warranties and warnings of Fabtech products with the consumer prior to purchase.

Fabtech reserves the right to super cede, discontinue, change the design, finish, part number and/or application of parts when deemed necessary without written notice. Fabtech is not responsible for misprints or typographical errors within the website or price sheet. For the most recent Product Warranty and Warnings visit our website www.fabtechmotorsports.com